CAT SON TRADING Co., Ltd
infos@catson.com.vn

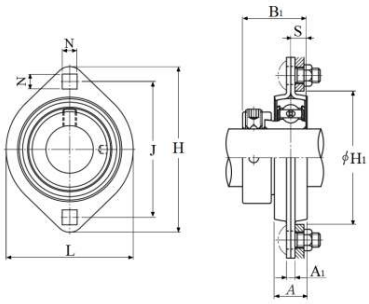

ITEM NUMBER

AELPFL203

Two Bolt Rhombus Flanged Unit, Pressed Steel Housing, Eccentric Locking Collar, AELPFL Type

Two Bolt Rhombus Flanged Unit, Pressed Steel Housing, Eccentric Locking Collar, AELPFL Type

d	D	B
17 mm	—	—
Bore	Outside diameter	Width

View details: https://catson.vn/tra-cuu-vong-bi/ntn/aelpfl203/?lang=en

Technical Specifications

Type	**2-Bolt Flanged Unit**
Bearing Type	**Ball Bearing**
Locking Device	**Eccentric Locking Collar**
Seal Type	**Contact**
Seal Material	**Nitrile Rubber**
Bearing Number	**AEL203**
Housing Number	**PFL203**
Housing Construction	**2 Piece**
End Type	**Open**
Performance	**Light Duty**
Dynamic Load Rating	**9600 N**
Static Load Rating	**4600 N**
Rotational Speed [Max]	**8000.0 RPM**
Weight	**0.300 kg**
Operating Temperature Range	**-40 to 120 °C**
Lubrication	**Non-Relubricatable**

Dimensional Specifications

d	17.000 mm
H	81.0 mm
L	59.0 mm
J	63.5 mm
A	14.0 mm
A1	4.0 mm
N	7.1 mm
B1	28.600 mm
S	6.500 mm
H1	49.0 mm

CONTACT

Email: infos@catson.com.vn
Website: www.catson.vn
Phone: +84 28 3820 8888
Fax: +84 28 3826 8888