CAT SON TRADING Co., Ltd
infos@catson.com.vn

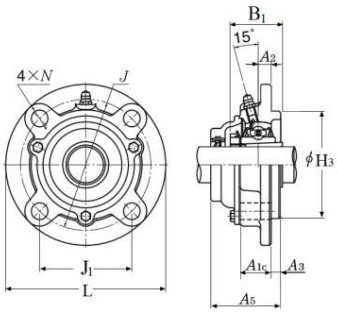

ITEM NUMBER

C-UKFC211D1-WHEN-USED-WITH-H2311X

Four Bolt Round Flange Unit, Cast Housing, Adapter, Cast Dust Cover, Open End, UKFC Type

Four Bolt Round Flange Unit, Cast Housing, Adapter, Cast Dust Cover, Open End, UKFC Type

d	D	B
50 mm	—	—
Bore	Outside diameter	Width

View details: https://catson.vn/tra-cuu-vong-bi/ntn/c-ukfc211d1-when-used-with-h2311x/?lang=en

Technical Specifications

Type	**4-Bolt Round Flanged Unit**
Bearing Type	**Ball Bearing**
Locking Device	**Adapter**
Seal Type	**Contact**
Seal Material	**Nitrile Rubber**
Bearing Number	**UK211D1**
Housing Number	**C-FC211D1**
Housing Material	**Cast Iron**
Housing Construction	**1 Piece**
End Type	**Open**
Performance	**Light Duty**
Dynamic Load Rating	**43500 N**
Static Load Rating	**29200 N**
Weight	**5.100 kg**
Operating Temperature Range	**-40 to 120 °C**
Lubrication	**Relubricatable**

Dimensional Specifications

d	50.000 mm
L	185.0 mm
J	150.0 mm
J1	106.1 mm
A1c	31.0 mm
A2	13.0 mm
A3	12.0 mm
A5	75.000 mm
H3	125.0 mm
N	19.0 mm
B1	59.000 mm
F	6.000 mm
Notes	Sales drawing reflects "Bore Size w/o Adapter". They do not show the "d"dimension, which is the bore size with adapter

CONTACT

Email: infos@catson.com.vn
Website: www.catson.vn
Phone: +84 28 3820 8888
Fax: +84 28 3826 8888