CAT SON TRADING Co., Ltd
infos@catson.com.vn

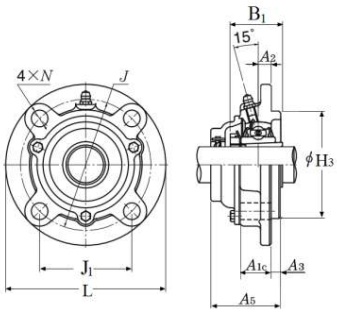

ITEM NUMBER

C-UKFC217D1-WHEN-USED-WITH-HE2317X

Four Bolt Round Flange Unit, Cast Housing, Adapter, Cast Dust Cover, Open End, UKFC Type

Four Bolt Round Flange Unit, Cast Housing, Adapter, Cast Dust Cover, Open End, UKFC Type

d	D	B
76,200 mm	—	—
Bore	Outside diameter	Width

View details: https://catson.vn/tra-cuu-vong-bi/ntn/c-ukfc217d1-when-used-with-he2317x/?lang=en

Technical Specifications

Type	**4-Bolt Round Flanged Unit**
Bearing Type	**Ball Bearing**
Locking Device	**Adapter**
Seal Type	**Contact**
Seal Material	**Nitrile Rubber**
Bearing Number	**UK217D1**
Housing Number	**C-FC217D1**
Housing Material	**Cast Iron**
Housing Construction	**1 Piece**
End Type	**Open**
Performance	**Light Duty**
Dynamic Load Rating	**83500 N**
Static Load Rating	**64000 N**
Weight	**13.000 kg**
Operating Temperature Range	**-40 to 120 °C**
Lubrication	**Relubricatable**

Dimensional Specifications

d	76.200 mm
L	250.0 mm
J	208.0 mm
J1	147.1 mm
A1c	45.0 mm
A2	18.0 mm
A3	18.0 mm
A5	114.000 mm
H3	180.0 mm
N	23.0 mm
B1	82.000 mm
F	10.100 mm
Notes	Sales drawing reflects "Bore Size w/o Adapter". They do not show the "d"dimension, which is the bore size with adapter

CONTACT

Email: infos@catson.com.vn
Website: www.catson.vn
Phone: +84 28 3820 8888
Fax: +84 28 3826 8888