CAT SON TRADING Co., Ltd
infos@catson.com.vn

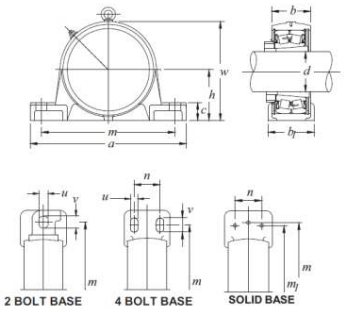

MÃ SẢN PHẨM

SPW2228-500N1

Sealed Spherical Pillow Blocks, SPW Type

Sealed Spherical Pillow Blocks, SPAW/SPW Type

d	D	B
127 mm	—	—
Đường kính trong	Đường kính ngoài	Độ rộng

Xem chi tiết: https://catson.vn/tra-cuu-vong-bi/ntn/spw2228-500n1/

Thông số kỹ thuật

Loại	**Pillow Block Unit**
Bearing Type	**Spherical Roller Bearing**
Seal Material	**Nitrile Rubber**
Locking Device	**Adapter**
Bearing Number	**MX-W22228EALLKW33C3**
Housing Number	**SP228N1**
Adapter Sleeve Number	**HE2328M1**
Housing Material	**Ductile Iron**
Housing Construction	**1 Piece**
Mounting Type	**2-Bolt**
Performance	**Heavy Duty**
End Type	**Open**
Tải trọng động	**912000 N**
Tải trọng tĩnh	**1010000 N**
Rotational Speed [Max]	**1100 RPM**
Weight	**53.520 kg**
Khoảng nhiệt độ làm việc	**-40 to 200 °C**

Lubrication	**Relubricatable**

Guidelines for Mounting

Axial Displacement - Min.	**0.043 in**
Axial Displacement - Max.	**0.047 in**
Recommended Locknut Rotation	**180 º**

Allowable Loads

Allowable Loads - P60	**82500 lb**
Allowable Loads - P90	**52000 lb**
Allowable Loads - P120	**27500 lb**
Allowable Loads - P150	**25500 lb**
Allowable Loads - P180	**27500 lb**

Thông số kích thước

d – đường kính trong	**127.000 mm**
h	**150.0 mm**
a	**500.0 mm**
b	**120.0 mm**
b1	**150.0 mm**
c	**50.0 mm**
m	**420.0 mm**
w	**305.0 mm**
u	**33.0 mm**
v	**42.0 mm**
Notes	**Sales drawing reflects "Bore Size w/o Adapter". They do not show the "d"dimension, which is the bore size with adapter**

LIÊN HỆ

Email: infos@catson.com.vn

Website: www.catson.vn

Điện thoại: +84 28 3820 8888

Fax: +84 28 3826 8888