CAT SON TRADING Co., Ltd
infos@catson.com.vn

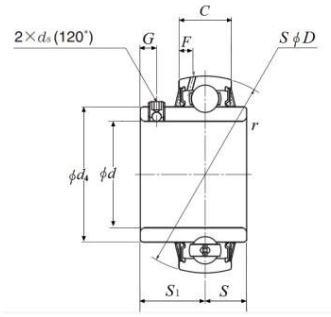

ITEM NUMBER

UCX12-206D1

Bearing Insert w/ Set Screw, Wide Inner Ring - Spherical O.D.

Set Screw Type Bearings - Spherical O.D.

d	D	B
60,325 mm	120 mm	65,100 mm
Bore	Outside diameter	Width

View details: https://catson.vn/tra-cuu-vong-bi/ntn/ucx12-206d1/?lang=en

Technical Specifications

Type	**Insert Bearing**
Bore Type	**Round**
Bearing Type	**Ball Bearing**
Material	**Through Hardened Steel**
Ball Material	**Steel**
Seal Type	**Contact**
Seal Material	**Nitrile Rubber**
Precision Rating	**ISO Class 0**
Performance	**Intermediate Duty**
Locking Device	**Set Screw**
Lubrication	**Relubricatable**
Static Load Rating	**40000 N**
Dynamic Load Rating	**57500 N**
Enclosure	**Double Sealed**
Weight	**2.250 kg**
Operating Temperature Range	**-40 to 120 °C**

Dimensional Specifications

d	60.325 mm
D	120.000 mm
C	32.000 mm
B	65.100 mm
r	2.000 mm
ds	3/8-24 UNF
G	10.000 mm
d4	82.500 mm
S1	39.700 mm
S	25.400 mm
F	8.700 mm

CONTACT

Email: infos@catson.com.vn
Website: www.catson.vn
Phone: +84 28 3820 8888
Fax: +84 28 3826 8888