Brand of NTN Group

Technical data

722511 DB

Flanged housings 722500

Flanged housing for bearings on adapter sleeve, made of grey cast, for grease lubrication

VISUAL (S)

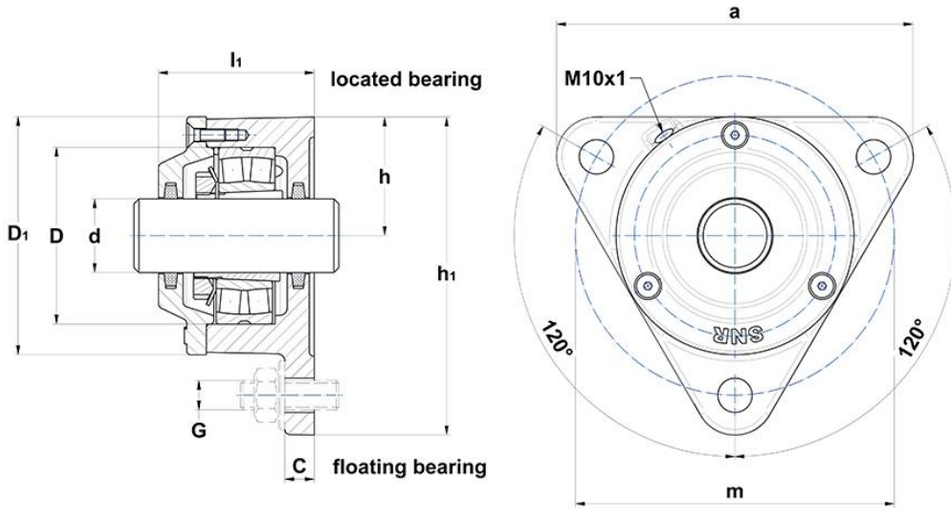

PRODUCT DEFINITION

Brand	SNR
d - Shaft diameter	50 mm
D1 - Outer diameter cover	128 mm
a - Housing length	192 mm
c - Housing foot height	12 mm
h - Bearing center height	65 mm
h1 - Housing height	172 mm
l1 - Housing width over covers	81,5 mm

722511 DB
Flanged housings 722500

PRODUCT DEFINITION	
m - Mounting hole/punches distance (length)	170 mm
N - Mounting hole diameter	14 mm
D - Bearing seat diameter	100 mm
Mass	4,1 kg
Material of Housing	grey cast

BOLTS	
G - Fixing bolts	M12
Recommended torque fixing bolts	65 N-m
Cover bolts	M6x20
Recommended torque cover bolts	7 N-m

ASSOCIATED COMPONENTS - GENERAL	
Feltstrip	FS 8 x 6,5 x 210

ASSOCIATED COMPONENTS - OPTION 1	
Bearing	1211 K C3
Adapter sleeve	H211
Fixing ring (x1)	FR100x6x3

ASSOCIATED COMPONENTS - OPTION 2	
Bearing	2211 K C3
Adapter sleeve	H311
Fixing ring (x1)	FE100x85x2

ASSOCIATED COMPONENTS - OPTION 3	
Bearing	22211 K
Adapter sleeve	H311

ASSOCIATED COMPONENTS - OPTION 3	
Fixing ring (x1)	FE100x85x2