Technical data

DLG 314 AF

Unsplit housings ZLOE, ZLG

Three bearing housing, made of grey cast, for grease lubrication

KIT CONTENT

6314C3, 2x 7314 BG, V-80S, ASG 6314, Fl 18

VISUAL (S)

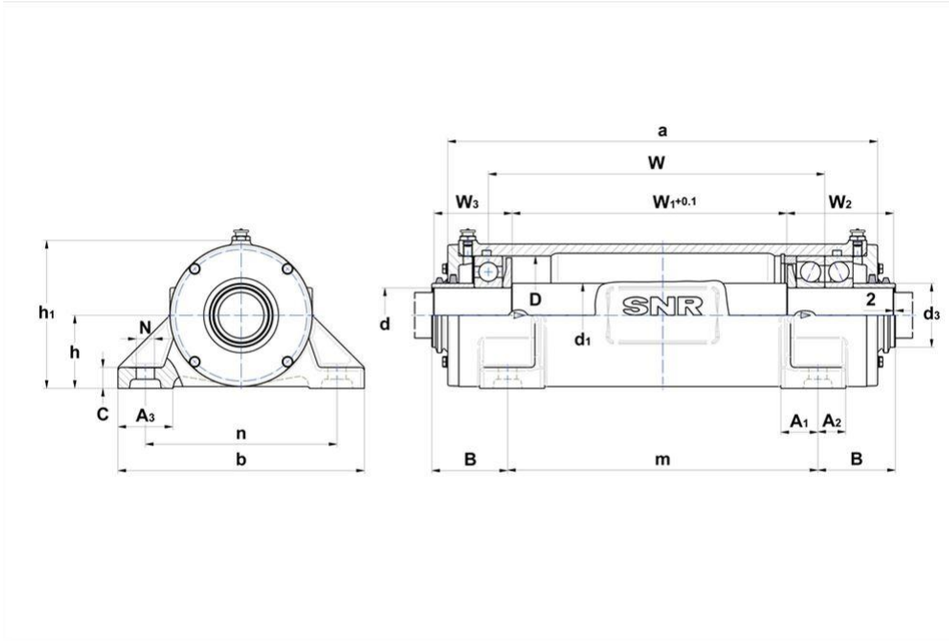

PRODUCT DEFINITION

Brand	SNR
d - Shaft diameter	70 mm
d1 - Shaft diameter between bearings	80 mm
d3 - Outer diameter sleeve	80 mm
a - Housing length	517 mm
b - Housing foot width	290 mm

NTN Europe
1 rue des Usines · BP 2017 · 74010 Annecy Cedex · France · Tel. +33 (0)4 50 65 30 00
S.A. au capital de 322 639 919 € · RCS ANNECY B 325 821 072 · Id. Fiscale : FR 48 325 821 072
SIRET 325 821 072 00015 · Code APE 2815 Z · Code NACE 28.15

DLG 314 AF
Unsplit housings ZLOE, ZLG

PRODUCT DEFINITION	
c - Housing foot height	25 mm
h - Bearing center height	95 mm
h1 - Housing height	190 mm
m - Mounting hole/punches distance (length)	380 mm
n - Mounting hole distance (width)	230 mm
N - Mounting hole diameter	20 mm
B - Distance mounting hole to shaft step	83,5 mm
W - Bearing distance	406 mm
W1 - Central shaft length	331,5 mm
W2 - Right shaft end length	124 mm
W3 - Left shaft end length	91,5 mm
A1	45 mm
A2	35 mm
A3 - ZLG foot width	60 mm
D - Bearing seat diameter	150 mm
Mass	37 kg
Material of Housing	grey cast

BOLTS	
G - Fixing bolts	M16
Recommended torque fixing bolts	150 N-m
Cover bolts	M8x25
Recommended torque cover bolts	17 N-m