Brand of NTN Group

# Technical data

## LGBCH20FESSNZ2-N

Standard flange type carriage with ball chain

## VISUAL (S)

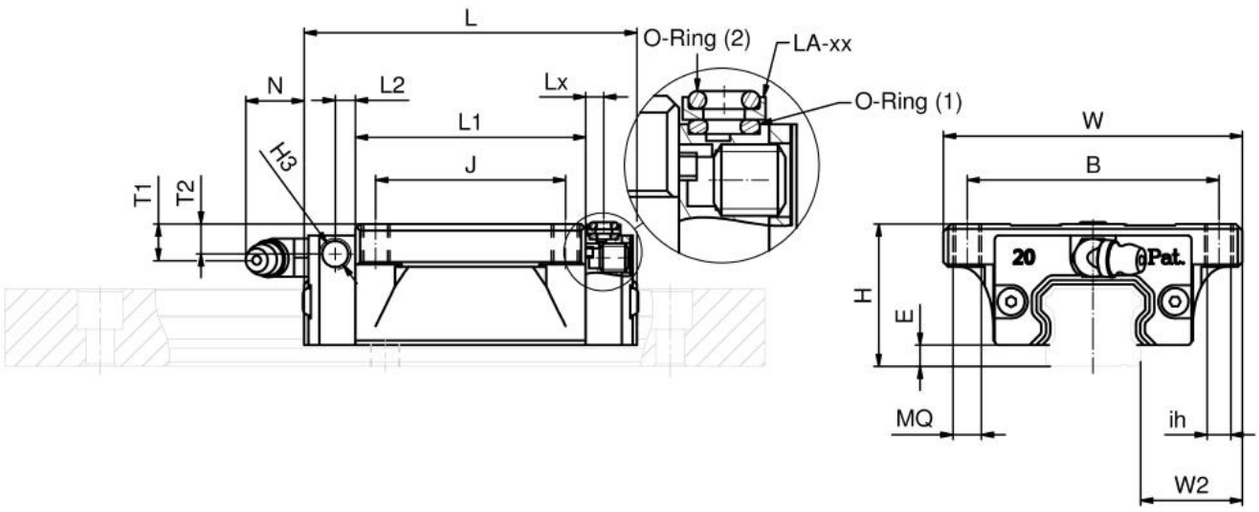


## PRODUCT DEFINITION

| | |
|---|---|
| **Brand** | SNR |
| **Series** | LGB |
| **Carriage version** | C |
| **Carriage Height** | H |
| **Size** | 20 |
| **Design type** | FE |
| **Sealing** | SS - End seals on both sides, inner and side seals |
| **Precision class** | N |
| **Preload class** | Z2 |

# LGBCH20FESSNZ2-N

## Standard flange type carriage with ball chain

| PRODUCT DEFINITION | |
|---|---|
| **Material** | Carbon steel |
| **Special options** | N - Standard |
| **Lubrication connection** | 00 - Hydraulic type grease nipple 67° |
| **Lubricant** | A - SNR LUB HEAVY DUTY |
| **H** | 30 mm |
| **W** | 63 mm |
| **W2** | 21,5 mm |
| **E** | 4,5 mm |
| **L - Length** | 97,3 mm |
| **B - Flange width** | 53 mm |
| **J** | 40 mm |
| **MQ** | M 6 |
| **ih** | 5,4 mm |
| **l** | 9 mm |
| **L1** | 76,5 mm |
| **H2** | M 6 |
| **T1** | 7,1 mm |
| **N** | 12,3 mm |
| **T2** | 6,3 mm |
| **L2** | 4,25 mm |
| **H3** | M 6 |
| **Lx** | 3,8 mm |
| **Mass** | 0,61 kg |

# LGBCH20FESSNZ2-N

## Standard flange type carriage with ball chain

| PRODUCT PERFORMANCE | |
|---|---|
| **C50** | 27850000 mN |
| **C100** | 22100000 mN |
| **C0** | 49610000 mN |
| **Mx** | 0.464 kN-m |
| **My** | 0.565 kN-m |
| **Mz** | 0.565 kN-m |