Brand of NTN Group

Technical data

LGBCH20FNSSNZ2-N

Standard flange type carriage with ball chain

VISUAL (S)

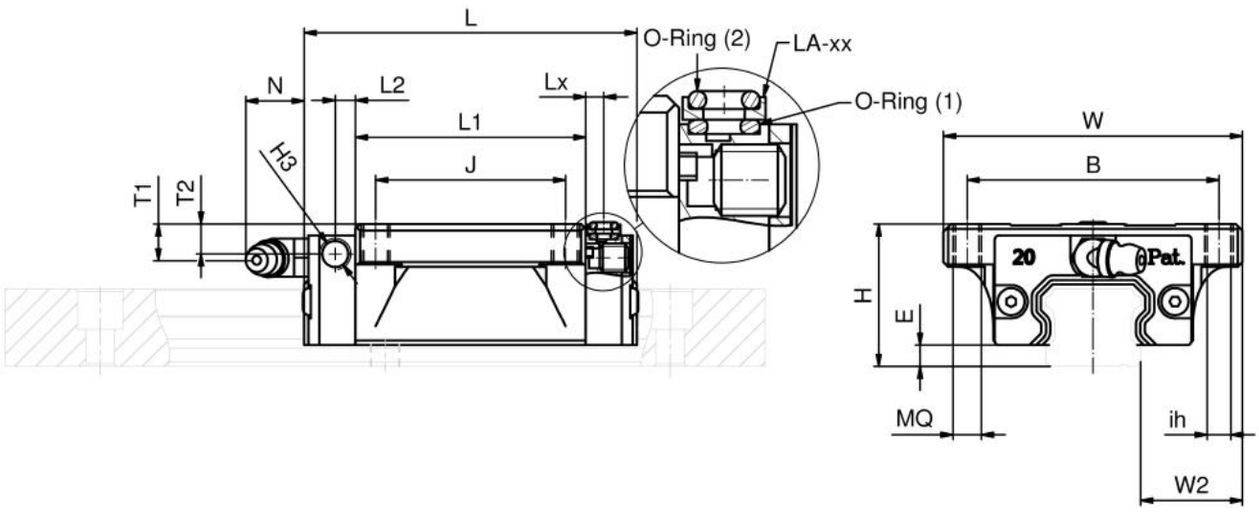

PRODUCT DEFINITION

Brand	SNR
Series	LGB
Carriage version	C
Carriage Height	H
Size	20
Design type	FN
Sealing	SS - End seals on both sides, inner and side seals
Precision class	N
Preload class	Z2

LGBCH20FNSSNZ2-N

Standard flange type carriage with ball chain

PRODUCT DEFINITION	
Material	Carbon steel
Special options	N - Standard
Lubrication connection	00 - Hydraulic type grease nipple 67°
Lubricant	A - SNR LUB HEAVY DUTY
H	30 mm
W	63 mm
W2	21,5 mm
E	4,5 mm
L - Length	70,1 mm
B - Flange width	53 mm
J	40 mm
MQ	M 6
ih	5,4 mm
l	9 mm
L1	48,5 mm
H2	M 6
T1	7,1 mm
N	12,3 mm
T2	6,3 mm
L2	4,25 mm
H3	M 6
Lx	3,8 mm
Mass	0,4 kg

LGBCH20FNSSNZ2-N

Standard flange type carriage with ball chain

PRODUCT PERFORMANCE	
C50	17980000 mN
C100	14270000 mN
C0	30960000 mN
Mx	0.289 kN-m
My	0.224 kN-m
Mz	0.224 kN-m