Brand of NTN Group

Technical data

LGBCH35BESSNZ1-N

Standard block type carriage with ball chain

VISUAL (S)

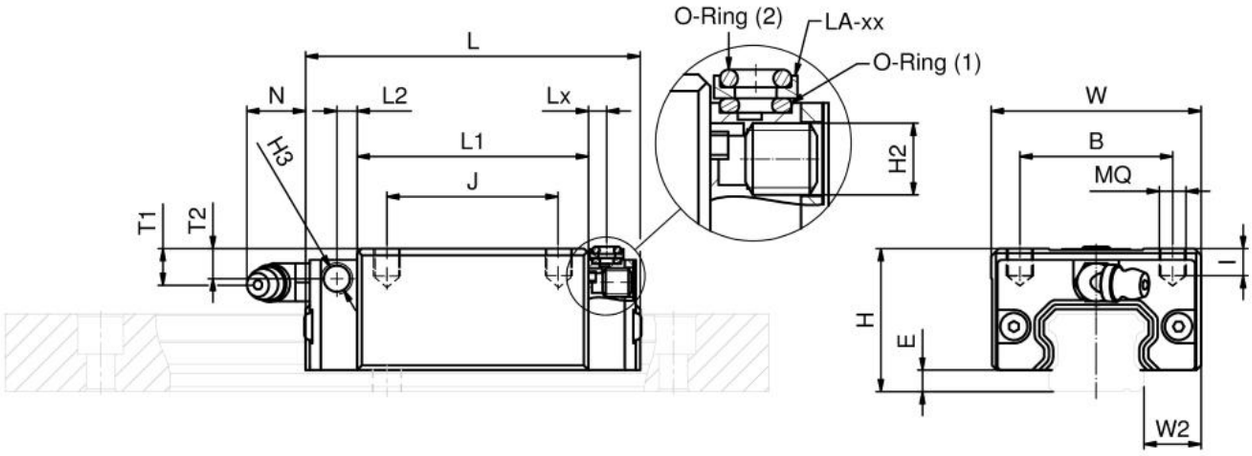

PRODUCT DEFINITION

Brand	SNR
Series	LGB
Carriage version	C
Carriage Height	H
Size	35
Design type	BE
Sealing	SS - End seals on both sides, inner and side seals
Precision class	N
Preload class	Z1

LGBCH35BESSNZ1-N

Standard block type carriage with ball chain

PRODUCT DEFINITION

Material	Carbon steel
Special options	N - Standard
Lubrication connection	00 - Hydraulic type grease nipple 67°
Lubricant	A - SNR LUB HEAVY DUTY
H	55 mm
W	70 mm
W2	18 mm
E	7,5 mm
L - Length	153,5 mm
B - Flange width	50 mm
J	72 mm
MQ	M 8
I	12 mm
L1	122,5 mm
H2	M 6
T1	15 mm
N	11,5 mm
T2	13,5 mm
L2	7,25 mm
H3	M 6
Lx	5 mm
Mass	2,34 kg

PRODUCT PERFORMANCE

LGBCH35BESSNZ1-N

Standard block type carriage with ball chain

PRODUCT PERFORMANCE	
C50	73290000 mN
C100	58170000 mN
C0	127680000 mN
Mx	2.02 kN-m
My	2.33 kN-m
Mz	2.33 kN-m