Brand of NTN Group

# Technical data

## LGBCH35FLSSNZ0-N

Standard flange type carriage with ball chain

## VISUAL (S)

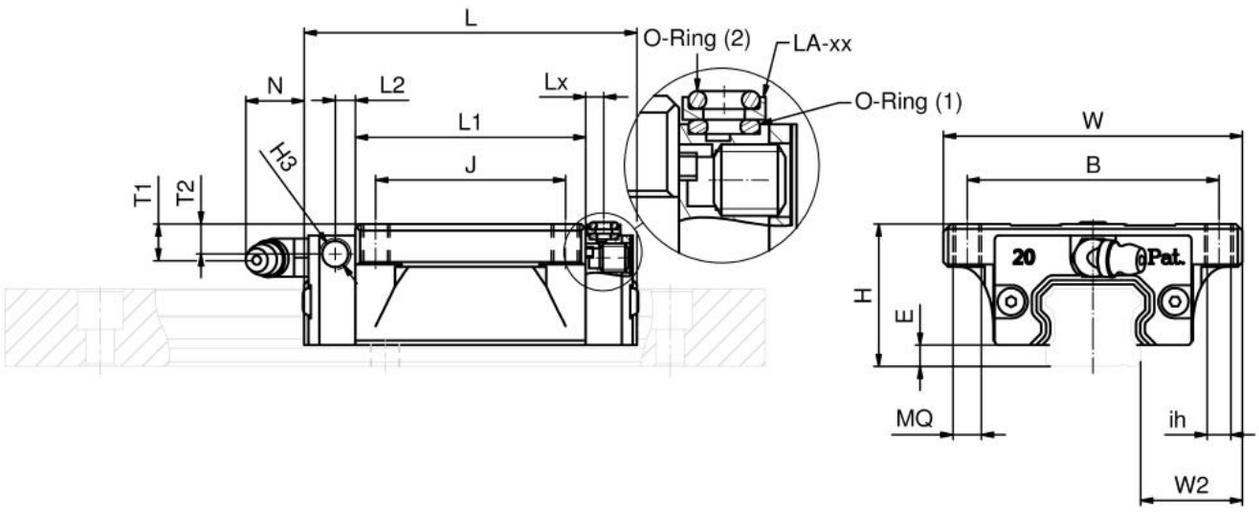


## PRODUCT DEFINITION

| | |
|---|---|
| **Brand** | SNR |
| **Series** | LGB |
| **Carriage version** | C |
| **Carriage Height** | H |
| **Size** | 35 |
| **Design type** | FL |
| **Sealing** | SS - End seals on both sides, inner and side seals |
| **Precision class** | N |
| **Preload class** | Z0 |

# LGBCH35FLSSNZ0-N

## Standard flange type carriage with ball chain

| PRODUCT DEFINITION | |
|---|---|
| **Material** | Carbon steel |
| **Special options** | N - Standard |
| **Lubrication connection** | 00 - Hydraulic type grease nipple 67° |
| **Lubricant** | A - SNR LUB HEAVY DUTY |
| **H** | 48 mm |
| **W** | 100 mm |
| **W2** | 33 mm |
| **E** | 7,5 mm |
| **L - Length** | 123,5 mm |
| **B - Flange width** | 82 mm |
| **J** | 62 mm |
| **MQ** | M 10 |
| **ih** | 8,6 mm |
| **l** | 14 mm |
| **L1** | 92,5 mm |
| **H2** | M 6 |
| **T1** | 8 mm |
| **N** | 11,5 mm |
| **T2** | 6,5 mm |
| **L2** | 7,25 mm |
| **H3** | M 6 |
| **Lx** | 5 mm |
| **Mass** | 1,9 kg |

# LGBCH35FLSSNZ0-N

## Standard flange type carriage with ball chain

| PRODUCT PERFORMANCE | |
|---|---|
| **C50** | 66610000 mN |
| **C100** | 52870000 mN |
| **C0** | 103290000 mN |
| **Mx** | 1.633 kN-m |
| **My** | 1.424 kN-m |
| **Mz** | 1.424 kN-m |