Brand of NTN Group

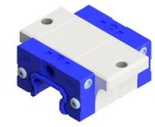

Technical data

LGBCH35FSSSNZ1-N

Standard flange type carriage with ball chain

VISUAL (S)

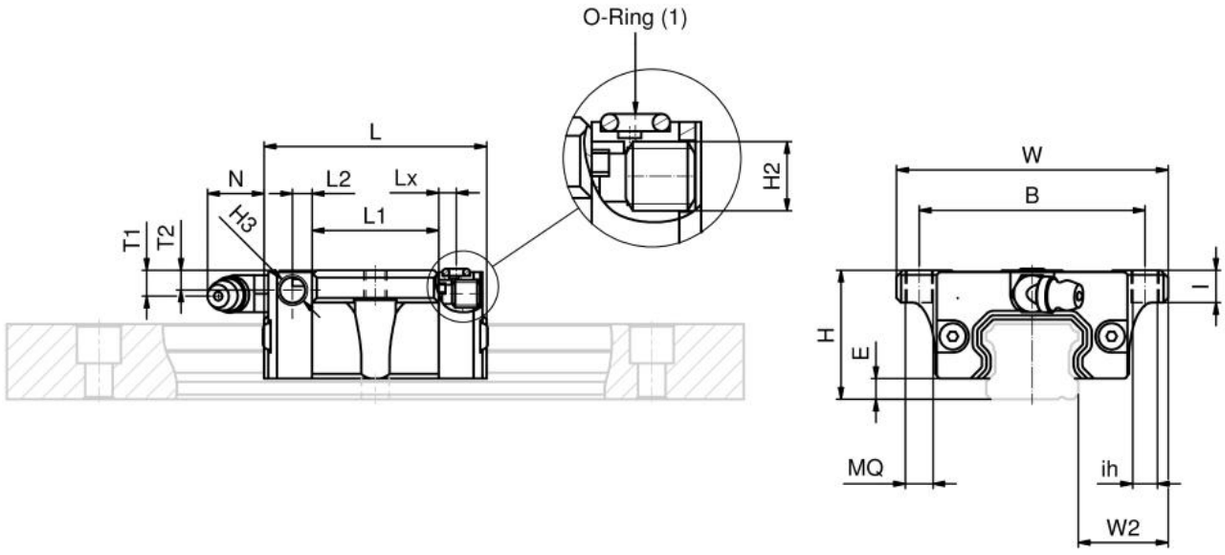

PRODUCT DEFINITION

Brand	SNR
Series	LGB
Carriage version	C
Carriage Height	H
Size	35
Design type	FS
Sealing	SS - End seals on both sides, inner and side seals
Precision class	N
Preload class	Z1

LGBCH35FSSSNZ1-N

Standard flange type carriage with ball chain

PRODUCT DEFINITION	
Material	Carbon steel
Special options	N - Standard
Lubrication connection	00 - Hydraulic type grease nipple 67°
Lubricant	A - SNR LUB HEAVY DUTY
H	48 mm
W	100 mm
W2	33 mm
E	7,5 mm
L - Length	75,5 mm
B - Flange width	82 mm
MQ	M 10
ih	8,6 mm
l	14 mm
L1	44,5 mm
H2	M 6
T1	8 mm
N	11,5 mm
T2	6,5 mm
L2	7,25 mm
H3	M 6
Lx	5 mm
Mass	1 kg

PRODUCT PERFORMANCE

LGBCH35FSSSNZ1-N
Standard flange type carriage with ball chain

PRODUCT PERFORMANCE	
C50	26720000 mN
C100	21210000 mN
C0	41430000 mN
Mx	0.655 kN-m
My	0.275 kN-m
Mz	0.275 kN-m