Technical data

LGBCS15FSSSNZ2-N

Standard flange type carriage with ball chain

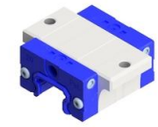

VISUAL (S)

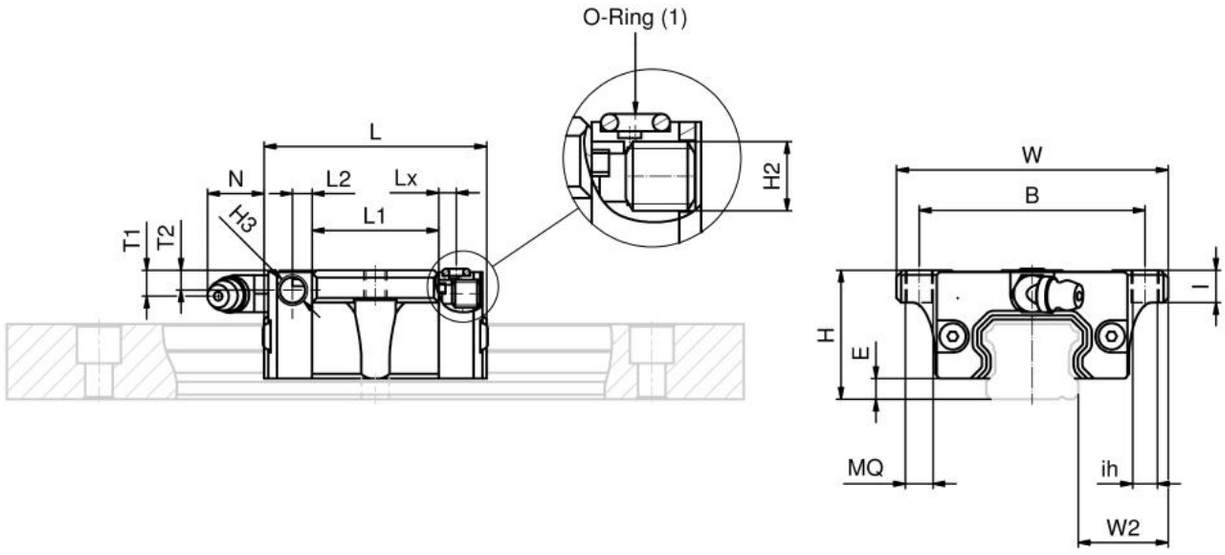

PRODUCT DEFINITION

Brand	SNR
Series	LGB
Carriage version	C
Carriage Height	S
Size	15
Design type	FS
Sealing	SS - End seals on both sides, inner and side seals
Precision class	N
Preload class	Z2

LGBCS15FSSSNZ2-N

Standard flange type carriage with ball chain

PRODUCT DEFINITION	
Material	Carbon steel
Special options	N - Standard
Lubrication connection	02 - Cup head grease nipple 0°
Lubricant	A - SNR LUB HEAVY DUTY
H	24 mm
W	52 mm
W2	18,5 mm
E	3,3 mm
L - Length	40,6 mm
B - Flange width	41 mm
MQ	M 5
ih	4,4 mm
l	7,5 mm
L1	22,2 mm
H2	M 3
T1	5,5 mm
N	5,7 mm
T2	4,5 mm
L2	4,2 mm
H3	M 3
Lx	3 mm
Mass	0,12 kg

PRODUCT PERFORMANCE

LGBCS15FSSSNZ2-N

Standard flange type carriage with ball chain

PRODUCT PERFORMANCE	
C50	5810000 mN
C100	4610000 mN
C0	9900000 mN
Mx	0.069 kN-m
My	0.032 kN-m
Mz	0.032 kN-m