Brand of NTN Group

Technical data

LGBCS20BNSSNZ0-N

Standard block type carriage with ball chain

VISUAL (S)

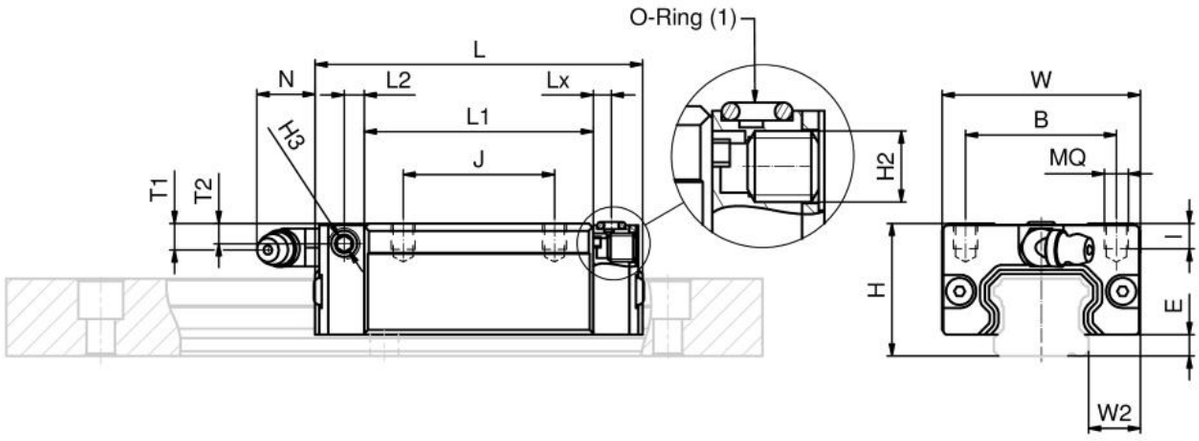

PRODUCT DEFINITION

Brand	SNR
Series	LGB
Carriage version	C
Carriage Height	S
Size	20
Design type	BN
Sealing	SS - End seals on both sides, inner and side seals
Precision class	N
Preload class	Z0

LGBCS20BNSSNZ0-N

Standard block type carriage with ball chain

PRODUCT DEFINITION

Material	Carbon steel
Special options	N - Standard
Lubrication connection	00 - Hydraulic type grease nipple 67°
Lubricant	A - SNR LUB HEAVY DUTY
H	28 mm
W	42 mm
W2	11 mm
E	4,5 mm
L - Length	70,1 mm
B - Flange width	32 mm
J	32 mm
MQ	M 5
I	6,5 mm
L1	48,5 mm
H2	M 6
T1	7,1 mm
N	12,3 mm
T2	4,3 mm
L2	4,25 mm
H3	M 6
Lx	3,8 mm
Mass	0,26 kg

PRODUCT PERFORMANCE

LGBCS20BNSSNZ0-N

Standard block type carriage with ball chain

PRODUCT PERFORMANCE	
C50	17980000 mN
C100	14270000 mN
C0	30960000 mN
Mx	0.289 kN-m
My	0.224 kN-m
Mz	0.224 kN-m