Brand of NTN Group

Technical data

LGBXH55BNSSNZ1-N

Conventional standard block type carriage

VISUAL (S)

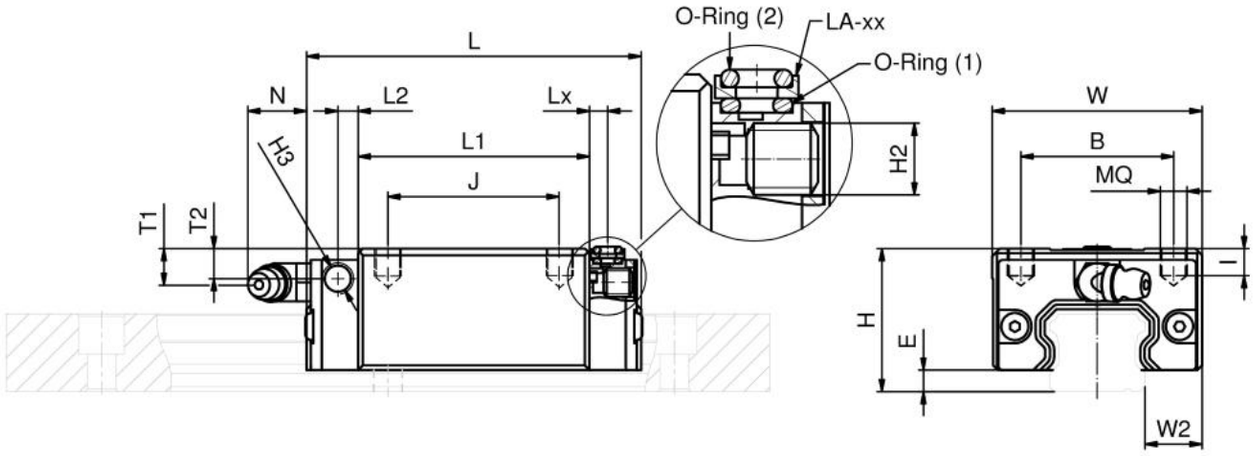

PRODUCT DEFINITION

Brand	SNR
Series	LGB
Carriage version	X
Carriage Height	H
Size	55
Design type	BN
Sealing	SS - End seals on both sides, inner and side seals
Precision class	N
Preload class	Z1

LGBXH55BNSSNZ1-N

Conventional standard block type carriage

PRODUCT DEFINITION

Material	Carbon steel
Special options	N - Standard
Lubrication connection	00 - Hydraulic type grease nipple 67°
Lubricant	A - SNR LUB HEAVY DUTY
H	80 mm
W	100 mm
W2	23,5 mm
E	12,7 mm
L - Length	155 mm
B - Flange width	75 mm
J	75 mm
MQ	M 12
I	22 mm
L1	116 mm
H2	M 8
T1	24 mm
N	10,8 mm
T2	24,5 mm
L2	10 mm
H3	M 8
Lx	7,5 mm
Mass	2,67 kg

PRODUCT PERFORMANCE

LGBXH55BNSSNZ1-N

Conventional standard block type carriage

PRODUCT PERFORMANCE	
C50	71490000 mN
C100	56740000 mN
C0	136620000 mN
Mx	3.385 kN-m
My	2.361 kN-m
Mz	2.361 kN-m