Technical data

SNCD3052R+24052+TS-60

Large split housings SNCD

Split plummer block for bearings with cylindrical bore, made of ductile cast, for grease lubrication

VISUAL (S)

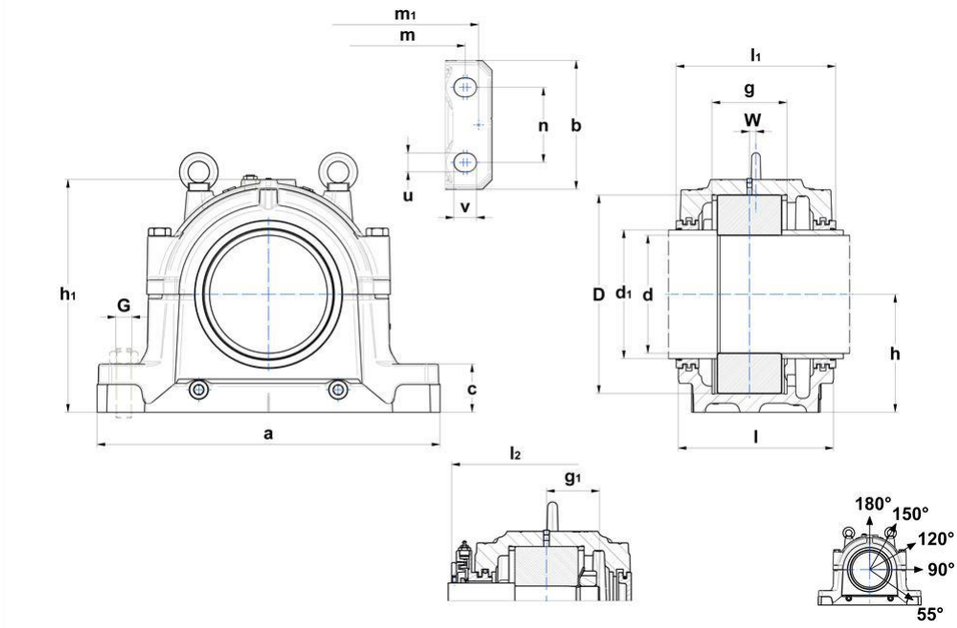

PRODUCT DEFINITION

Brand	SNR
d - Shaft diameter	260 mm
d1 - Shaft diameter outlet large	280 mm
a - Housing length	700 mm
b - Housing foot width	260 mm
c - Housing foot height	95 mm
g - Bearing seat width	148 mm
h - Bearing center height	240 mm

SNCD3052R+24052+TS-60

Large split housings SNCD

PRODUCT DEFINITION	
h1 - Housing height	474 mm
l - Housing mid width	310 mm
l1 - Width over TS	315 mm
l2 - Width over TA	397 mm
m - Mounting hole/punches distance (length)	600 mm
m1 - Distance punches dowel pins	650 mm
n - Mounting hole distance (width)	150 mm
u - Mounting hole (width)	35 mm
v - Mounting hole (length)	42 mm
D - Bearing seat diameter	400 mm
g1 - Distance small shaft shoulder to bearing center	119,5 mm
W - Bearing distance	12 mm
Housing weight	168 kg
Material of Housing	ductile cast
Initial grease quantity	6,5 l

BOLTS	
G - Fixing bolts	M30
Recommended torque fixing bolts	1005 N-m
Connection bolts	M30x180
Recommended torque connection bolts	870 N-m
Eye bolt(s)	M24
Maximum loads 120°	1300000000 mN
Maximum loads 150°	750000000 mN

SNCD3052R+24052+TS-60
Large split housings SNCD

BOLTS	
Maximum loads 180°	650000000 mN

BREAKING LOADS	
Breaking loads P 0°	6100000000 mN
Breaking loads P 55°	7500000000 mN
Breaking loads P 90°	3600000000 mN
Breaking loads P 120°	2700000000 mN
Breaking loads P 150°	2500000000 mN
Breaking loads P 180°	3000000000 mN

ASSOCIATED COMPONENTS - GENERAL	
Designation of housing	SNCD3052R
Bearing	24052
Fixing rings	2x FR400x4x10
Labyrinth sealing TS	TS-60
Taconite Sealing TA	TA-60
End cover TE	TE-60