Technical data

SNCD3072 + 23072K

Large split housings SNCD

Split plummer block for bearings on adapter sleeve, made of ductile cast, for grease lubrication

VISUAL (S)

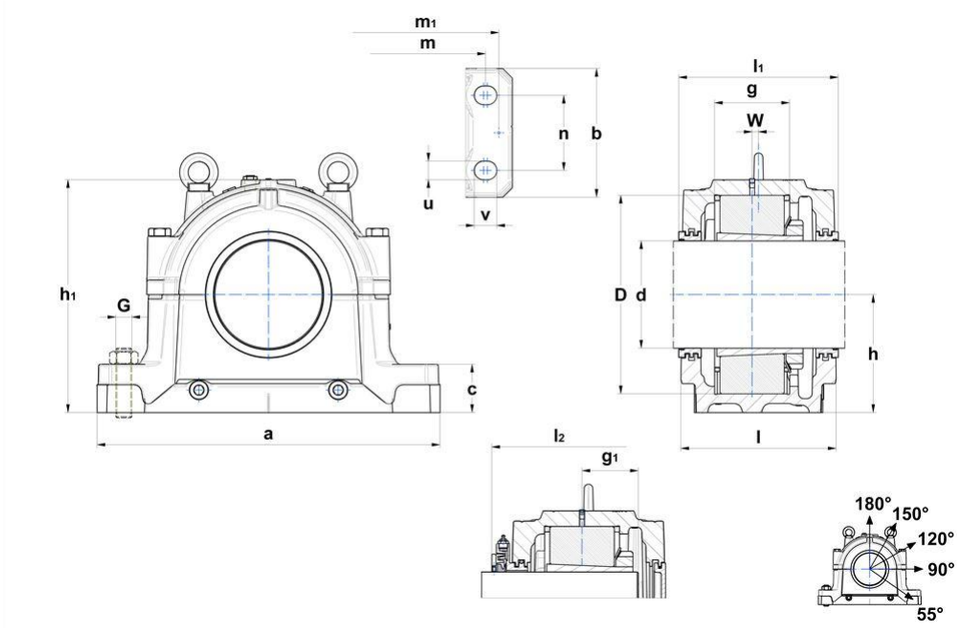

PRODUCT DEFINITION

Brand	SNR
d - Shaft diameter	340 mm
a - Housing length	880 mm
b - Housing foot width	330 mm
c - Housing foot height	115 mm
g - Bearing seat width	198 mm
h - Bearing center height	320 mm
h1 - Housing height	631 mm

SNCD3072 + 23072K

Large split housings SNCD

PRODUCT DEFINITION	
l - Housing mid width	370 mm
l1 - Width over TS	380 mm
l2 - Width over TA	461 mm
m - Mounting hole/punches distance (length)	750 mm
m1 - Distance punches dowel pins	820 mm
n - Mounting hole distance (width)	200 mm
u - Mounting hole (width)	42 mm
v - Mounting hole (length)	50 mm
D - Bearing seat diameter	540 mm
g1 - Distance small shaft shoulder to bearing center	155,5 mm
W - Bearing distance	23 mm
Housing weight	336 kg
Material of Housing	ductile cast
Initial grease quantity	14,4 l

BOLTS	
G - Fixing bolts	M36
Recommended torque fixing bolts	1750 N-m
Connection bolts	M30x240
Recommended torque connection bolts	870 N-m
Eye bolt(s)	M30
Maximum loads 120°	1300000000 mN
Maximum loads 150°	750000000 mN
Maximum loads 180°	650000000 mN

BREAKING LOADS	
Breaking loads P 0°	9700000000 mN
Breaking loads P 55°	12600000000 mN
Breaking loads P 90°	6100000000 mN
Breaking loads P 120°	4500000000 mN
Breaking loads P 150°	3900000000 mN
Breaking loads P 180°	5000000000 mN

ASSOCIATED COMPONENTS - GENERAL	
Designation of housing	SNCD3072
Bearing	23072K
Adapter sleeve	H3072
Fixing rings	4 x FR540x16x10
Labyrinth sealing TS	TS-72
Taconite Sealing TA	TA-72
End cover TE	TE-72