Technical data

SNCD3156R + 23156

Large split housings SNCD

Split plummer block for bearings with cylindrical bore, made of ductile cast, for grease lubrication

VISUAL (S)

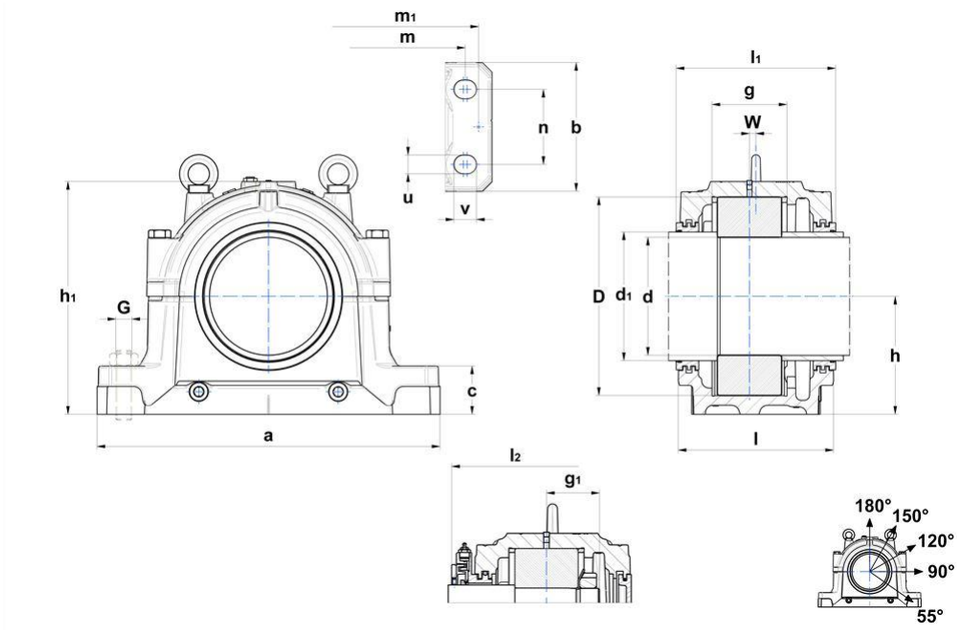

PRODUCT DEFINITION

Brand	SNR
d - Shaft diameter	280 mm
d1 - Shaft diameter outlet large	300 mm
a - Housing length	790 mm
b - Housing foot width	280 mm
c - Housing foot height	105 mm
g - Bearing seat width	166 mm
h - Bearing center height	280 mm

SNCD3156R + 23156

Large split housings SNCD

PRODUCT DEFINITION	
h1 - Housing height	551 mm
l - Housing mid width	320 mm
l1 - Width over TS	330 mm
l2 - Width over TA	412 mm
m - Mounting hole/punches distance (length)	670 mm
m1 - Distance punches dowel pins	740 mm
n - Mounting hole distance (width)	160 mm
u - Mounting hole (width)	42 mm
v - Mounting hole (length)	50 mm
D - Bearing seat diameter	460 mm
g1 - Distance small shaft shoulder to bearing center	134 mm
W - Bearing distance	16 mm
Housing weight	235 kg
Material of Housing	ductile cast
Initial grease quantity	8,4 l

BOLTS	
G - Fixing bolts	M36
Recommended torque fixing bolts	1750 N-m
Connection bolts	M30x220
Recommended torque connection bolts	870 N-m
Eye bolt(s)	M24
Maximum loads 120°	1300000000 mN
Maximum loads 150°	750000000 mN

BOLTS	
Maximum loads 180°	650000000 mN

BREAKING LOADS	
Breaking loads P 0°	7200000000 mN
Breaking loads P 55°	9000000000 mN
Breaking loads P 90°	4300000000 mN
Breaking loads P 120°	3200000000 mN
Breaking loads P 150°	2800000000 mN
Breaking loads P 180°	3600000000 mN

ASSOCIATED COMPONENTS - GENERAL	
Designation of housing	SNCD3156R
Bearing	23156
Fixing rings	2 x FR460x10x10
Labyrinth sealing TS	TS-64
Taconite Sealing TA	TA-64
End cover TE	TE-64