Brand of NTN Group

Technical data

SNOE220CAF

Oil lubricated housings SNOE

Split plummer block housing for spherical roller bearings with cylindrical bore, made of grey cast, for oil lubrication

VISUAL (S)

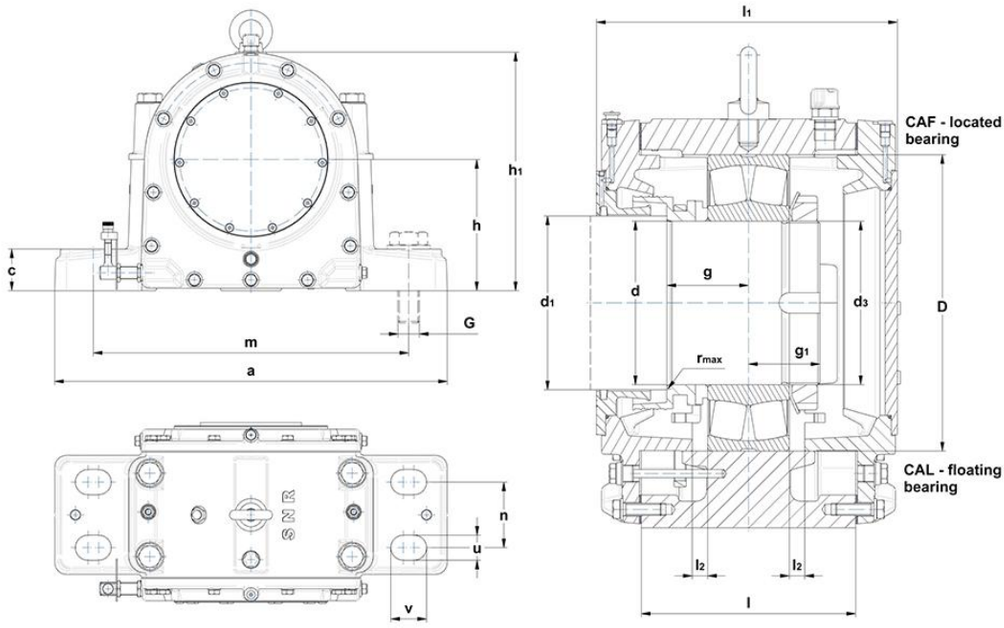

PRODUCT DEFINITION

Brand	SNR
d - Shaft diameter	100 mm
d1 - Shaft diameter outlet large	110 mm
d3 - Thread on shaft	M100x2
a - Housing length	490 mm
b - Housing foot width	160 mm
c - Housing foot height	50 mm
g - Distance large shaft shoulder to bearing center	60 mm

PRODUCT DEFINITION	
g1 - Distance small shaft shoulder to bearing center	45 mm
h - Bearing center height	150 mm
h1 - Housing height	270 mm
l - Housing mid width	170 mm
l1 - Housing width over covers	253 mm
l2 - Floating bearing displacement (x2)	0 mm
m - Mounting hole/punches distance (length)	400 mm
n - Mounting hole distance (width)	80 mm
u - Mounting hole (width)	30 mm
v - Mounting hole (length)	45 mm
r - Max shaft shoulder radius	2,5 mm
D - Bearing seat diameter	180 mm
Oil level	55-65 mm
Oil quantity	1,7 l
Mass	58 kg
Material of Housing	grey cast

ASSOCIATED COMPONENTS - GENERAL	
Bearing	22220
Nut	KM 20
Lock washer	MB 20

ASSOCIATED COMPONENTS - OPTION	
Feltstrips (optional)	9x7,5x428

BOLTS

BOLTS	
G - Fixing bolts	M24
Recommended torque	440 N-m
Connection bolts	M20
Recommended torque	260 N-m
Eye bolt(s)	M16